72100/72110

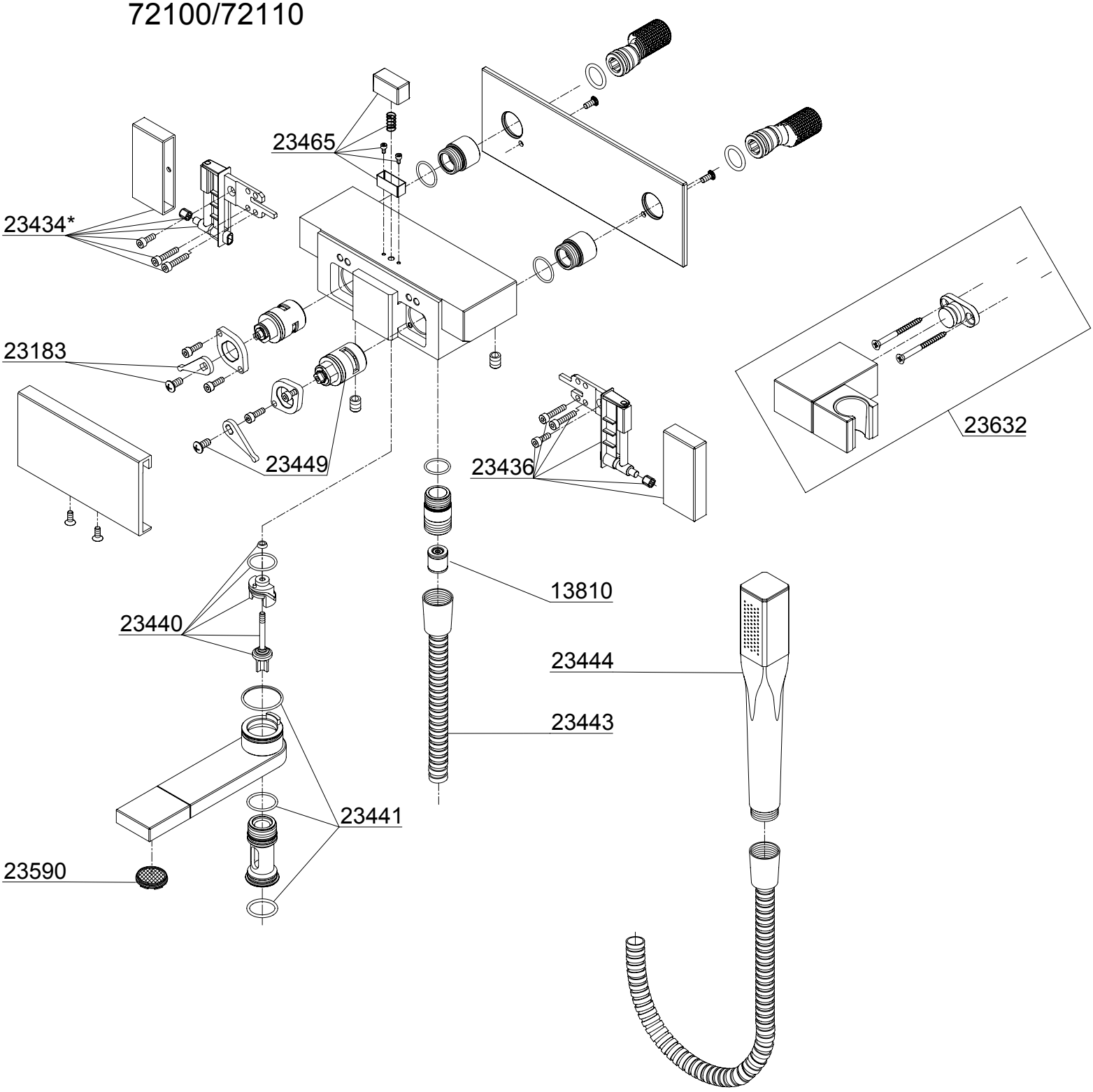
23465
23434*
23183
23449
23436
23632
13810
23440
23444
23443
23441
23590